ITEM NO.	PART NUMBER	DESCRIPTION	QTY.	COMPONENT NOTES
1	50-00983	Connector, M12 A-code socket, 8 pin, 12xL22 mm, molding style, solder cup, gold plated, IP67, shielded	1	
2	30-03039	Wire, 8C TS, 24 AWG, UL21765, 300V, 105C, 60C oil, UV, 7 mm, shielded, VW-1, TPU	1	
3	24-00349	Overmold, M12 plug and jack, 180°	1	TPU, black
4	Heat shrink	Heat shrink	1	black, covers drain
5	Heat shrink	Heat shrink	1	black, covers end of jacket

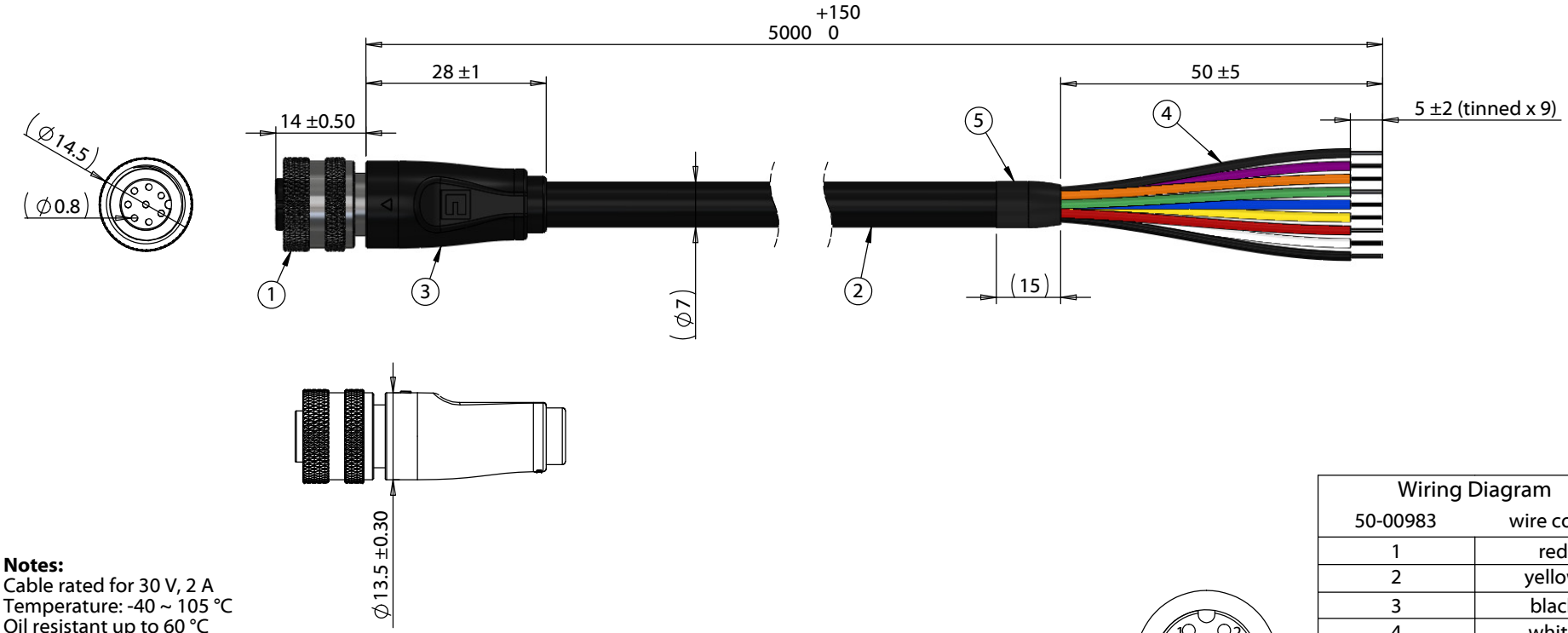

Notes:
Cable rated for 30 V, 2 A
Temperature: -40 ~ 105 °C
Oil resistant up to 60 °C
Water resistant up to 75 °C
UV resistant

IP67 waterproof rating when mated with corresponding (IP67) connector

Functionally equivalent components may be substituted

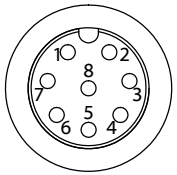

Front View
Not to Scale

Wiring Diagram	
50-00983	wire color
1	red
2	yellow
3	black
4	white
5	orange
6	blue
7	green
8	purple
Shell	shield/drain

Revision:	Date:	Description:
A	01/06/2025	Initial release

Prepared: RR Digitally signed by RR Date: 2025.01.06 11:25:04 -08'00'

Verified: AL Digitally signed by AL Date: 2025.01.08 15:25:07 -08'00'

Dimensions are in millimeters.
Tolerances:
X: ± 0.5 mm
X.X: ± 0.3 mm
X.XX: ± 0.05 mm

Notes:

RoHS compliant

Function test: no open, no short circuit, no intermittent

Description:

Cable, 5000 mm, 0.8 mm 8C 50-00983 M12 socket to 5 mm tinned, 24 AWG, 30-03039 wire, shielded

TENSILITY
tel 1.541.323.3228 800 877.670.7118
fax 1.541.323.4202 web tensility.com

Size: A
Part number: 10-06197
Scale: 1:1
Sheet 1 of 1

5 4 3 2 1

To see a custom version of this cable assembly, call Tensility at 541-323-3228 or email engineering@tensility.com