Style
M12 Plug
8 pin
A-coding

Ratings
Voltage: 30 V
Current: 2 A
Flammability: UL94 V-0

Operating Temperature Range
-25 ~ 80 °C

Materials
1. Insulator: Polyamide 66 (PA66), UL94 V-0, black
2. Pin: C3604 Brass, gold plated
3. M12 Shell: Zinc alloy, nickel plated
4. Screw: Polyamide 66 (PA66), UL94 V-0, black
5. Outer Shell: Polyamide 66 (PA66), UL94 V-0, black
6. Collet nut: Polyamide 66 (PA66), UL94 V-0, black
7. Collet: Silicone, black
8. O-ring: Silicone, green

Electrical Requirements
Dielectric strength: 1 min @ 1500 Vac
Insulation resistance: 100 MΩ @ 500 Vdc
Contact resistance: 10 mΩ or less

Mechanical Requirements
Life cycle: 500 mating cycles minimum

Assembly Info
Allen key: 0.8 mm (included)
Waterproof: IP67
Recommended cable OD: 4.0 ~ 8.0 mm
Terminal style: screw, 1.0 mm diameter
Max torque force:
M12 shell: 0.4 Nm
Collet nut: 0.8 ~ 1.0 Nm

Recommended Wires

AWG	TPU wire	PVC wire	4A compatible
24	30-03111	30-01691	Yes

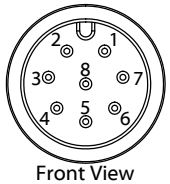

Front View
Not to Scale

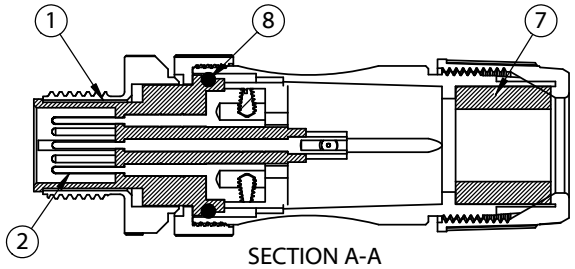

SECTION A-A

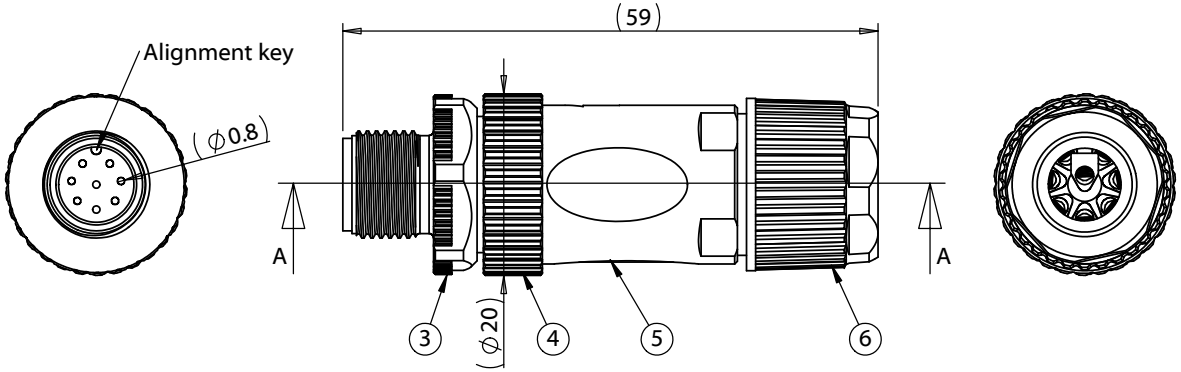

Revision:	Date:	Description:
A	07/28/2026	Initial release

Prepared: CR — Digitally signed by CR Date: 2026.07.30 09:06:01 -07'00'

Verified: KW — Digitally signed by KW Date: 2026.07.30 14:09:46 -07'00'

Dimensions are in millimeters.
Tolerances:
X: ± 0.3 mm
X.X: ± 0.1 mm
X.XX: ± 0.05 mm

Notes:

RoHS compliant

Function test: no open, no short circuit, no intermittent

Description:

Connector, M12 A-code plug, 8 pin, 12xL59 mm, gold plated, assembly style, screw terminal, IP67, metal thread

TENSILITY
tel 1.541.323.3228 800 877.670.7118
fax 1.541.323.4202 web tensility.com

Size: A
Part number: 55-00497
Scale: 1.2:1
Sheet 1 of 1

To see a custom version of this cable assembly, call Tensility at 541-323-3228 or email engineering@tensility.com

5 4 3 2 1