Style

Dc jack
Sealed, thread lock
IP68 (when mated)

Materials

1. Insulator, nylon + 15% glass fiber, UL94 V-0, black
2. Center pin, C3604 brass, nickel plated
3. Insulation ring, fiberglass
4. Sleeve shunt, C2680 brass, nickel plated
5. Center pin terminal, C2680 brass, tin plated
6. Sleeve, C2680 brass, nickel plated
7. Inner shell, C3604 brass, nickel plated
8. Outer shell, C3604 brass, nickel plated
9. Flat washer,C3604 brass, nickel plated
10. Hex nut, C3604 brass, nickel plated
11. O-ring, nitrile rubber

Assembly Info

Wire gauge: 22 AWG max

Mating connectors

Assembly type	Wire OD
55-00203	4.6 - 5.3
55-00204	3.9 - 4.5
55-00205	3.2 - 3.8

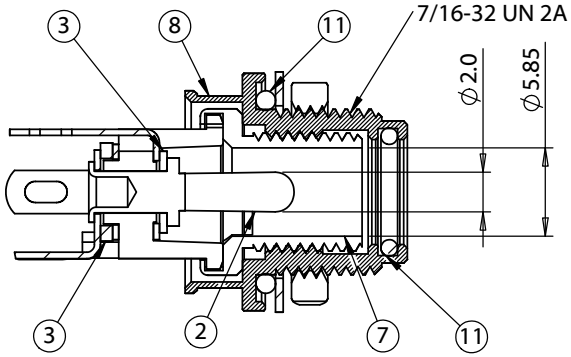

SECTION A-A
SCALE 2 : 1

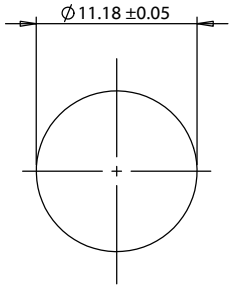

Panel cutout
Panel thickness (5.0mm max.)

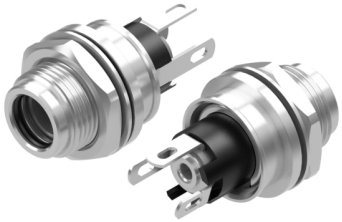

P.C.B. Layout

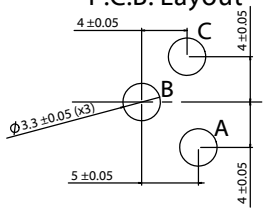

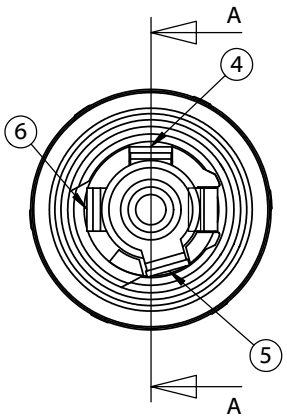

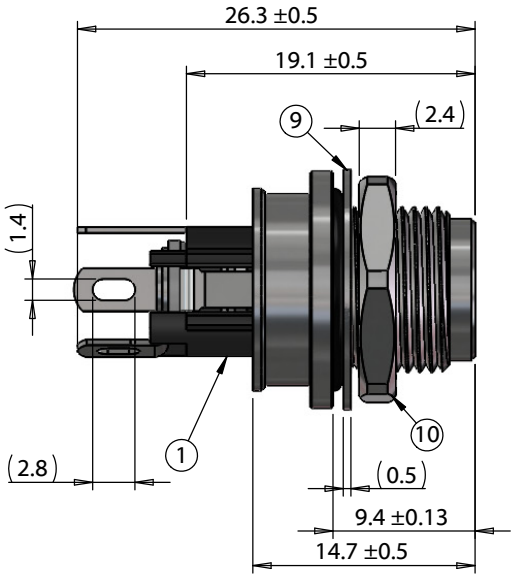

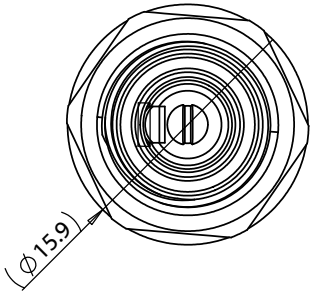

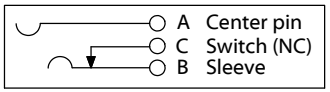

Revision:	Date:	Description:
A	02/19/2025	Initial release

Prepared: CR — Digitally signed by CR Date: 2025.12.11 12:26:37 -08'00'

Verified: KM — Digitally signed by KM Date: 2025.12.11 12:42:13 -08'00'

Dimensions are in millimeters.
Tolerances:
X: ± 0.3 mm
X.X: ± 0.1 mm
X.XX: ± 0.05 mm

Notes:

RoHS compliant

Function test: no open, no short circuit, no intermittent

Description:

Connector, dc jack, 5.5x2.0xL26.30 mm, panel mount, thru hole, solder eyelet, nickel plated, IP68, threaded, nut and washer

TENSILITY
tel 1.541.323.3228 800 877.670.7118
fax 1.541.323.4202 web tensility.com

Size: A
Part number: 54-00409
Scale: 5:1
Sheet 1 of 2

5 4 3 2 1

Ratings
Voltage: 48V
Current: 11A

Operating Temperature
-40°C ~ 95°C

Electrical Requirements
Dielectric strength: 1 min @ 500 Vac
Insulation resistance: 100 MΩ @ 500 Vdc
Contact resistance: 30 mΩ or less

Mechanical Requirements
Life cycle: 5000 mating cycles minimum
Insertion force: 0.3~4 kgf
Withdrawal force: 0.3~4 kgf

Environment Requirements
Heat Test: 70±2°C, relative humidity 70-85% for 48 hours without deformation.
Humidity Test: 40±2°C, relative humidity 90-95% for 48 hours without deformation.
Salt spray test: 5% salt water (PH 6.5-7.2) for 48 hours without deformation.

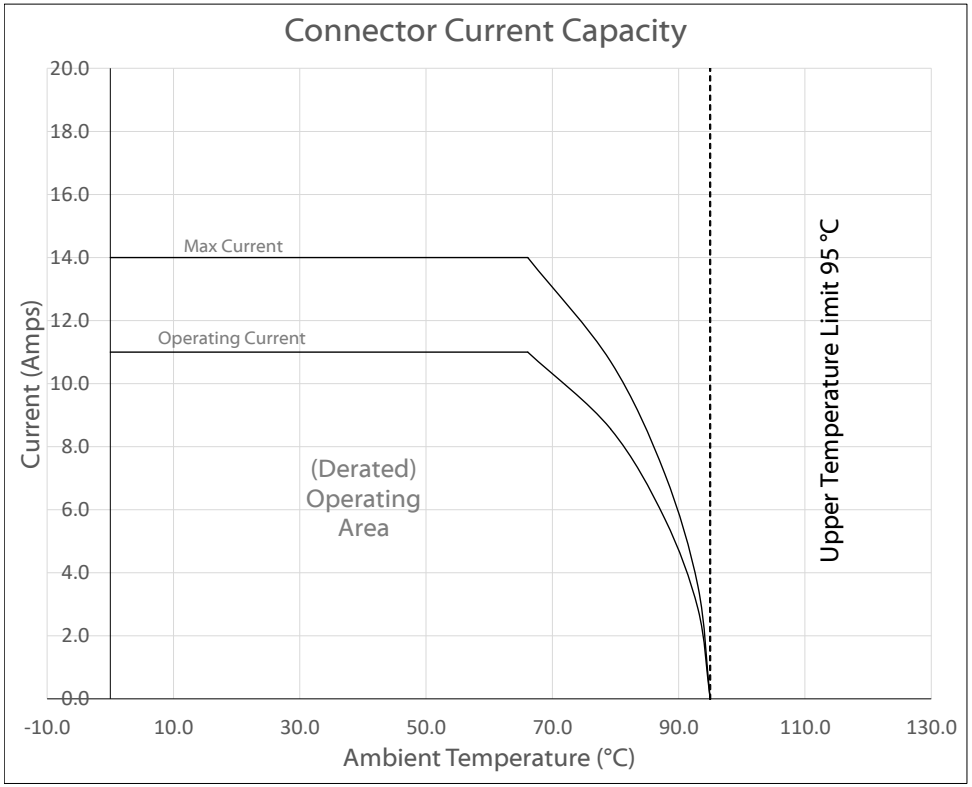

Testing based on IEC 60512-5-2. Max current curve generated with isolated test article under controlled environmental conditions, and does not take into account external factors such as housings,mating cables, or other circuitry. Operating current curve (derated by 20% of maximum values) accounts for external factors, and manufacturing variation.

Revision:	Date:	Description:
A	02/19/2025	Initial release

Prepared: CR Digitally signed by CR Date: 2025.12.11 12:51:31 -08'00'

Verified: KM Digitally signed by KM Date: 2025.12.11 12:42:23 -08'00'

Dimensions are in millimeters.
Tolerances:
X: ± 0.3 mm
X.X: ± 0.1 mm
X.XX: ± 0.05 mm

Notes:
RoHS compliant
Function test: no open, no short circuit, no intermittent

Description:
Connector, dc jack, 5.5x2.0xL26.30 mm, panel mount, thru hole, solder eyelet, nickel plated, IP68, threaded, nut and washer

TENSILITY
tel 1.541.323.3228 800 877.670.7118
fax 1.541.323.4202 web tensility.com

Size: A
Part number: 54-00409
Scale: 2:1
Sheet 2 of 2

5 4 3 2 1