ITEM NO.	PART NUMBER	DESCRIPTION	COMPONENT NOTES	QTY.
1	50-01028	Connector, M12 D-code socket, 4 pin, 12xL22 mm, molding style, solder cup, gold plated, IP67, shielded		1
2	30-03676	Wire, 4C, 2PR BC, 24AWG, CAT5e SF/UTP, UL20387, 300V, 105C, 60C oil, UV, 6 mm, shielded, VW-1, PVC		1
3	24-00349	Overmold, M12 plug and jack, 180°	PVC, black	1
4	32-00014	Heat shrink, 0.9 mm ID, 0.6 mm OD, EVA, 2:1 ratio, 125 °C, UL VW-1, thin wall	covers shield	1
5	32-00025	Heat shrink, 6.5 mm ID, 6 mm OD, EVA, 2:1 ratio, 125 °C, UL VW-1, thin wall	covers end of jacket	1

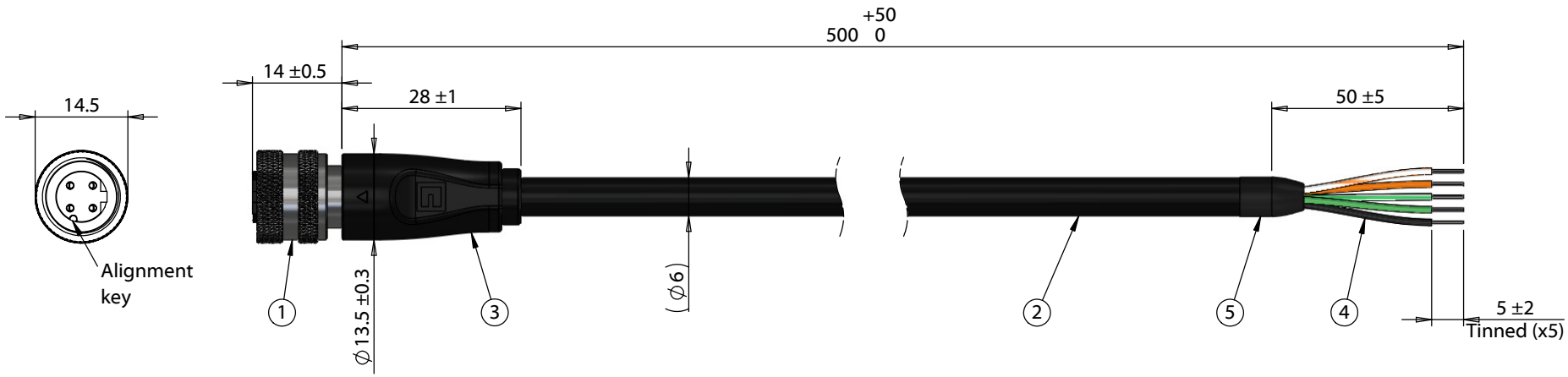

Notes:
Voltage: 250 V
Current: 4 A
Temperature: -40 ~ 105 °C
Signal: Ethernet CAT5e 1 Gbps

Wire:
Oil resistant up to 60 °C
Water resistant up to 75 °C
UV resistant

IP67 waterproof rating when M12 connector mated with corresponding (IP67) M12 connector

Functionally equivalent components may be substituted

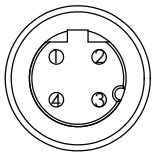

Front View
Not to Scale

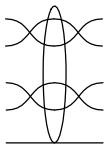

Wiring Diagram	
50-01028	wire color
1	white/orange
3	orange
2	white/green
4	green
Shell	Shield

Revision:	Date:	Description:
A	08/20/2025	Initial release

Prepared: CR Digitally signed by CR Date: 2025.08.29 11:55:04 -07'00'

Verified: AV Digitally signed by AV Date: 2025.09.01 11:12:26 -07'00'

Dimensions are in millimeters.
Tolerances:
X: ± 0.5 mm
X.X: ± 0.3 mm
X.XX: ± 0.05 mm

Notes:

RoHS compliant

Function test: no open, no short circuit, no intermittent

Description:

Cable, 500 mm, M12 D-code socket 4 pin 50-01028 to stripped and tinned, CAT5e, 24 AWG, 30-03676 wire

TENSILITY
tel 1.541.323.3228 800 877.670.7118
fax 1.541.323.4202 web tensility.com

Size: A
Part number: 10-06481
Scale: 1:1
Sheet 1 of 1

5 4 3 2 1

To see a custom version of this cable assembly, call Tensility at 541-323-3228 or email engineering@tensility.com